INSTALLATION & OPERATING INSTRUCTION MANUALS FOR BIG BAKERS OVEN FOR NEW ZEALAND AND AUSTRALIA

Date: 30th Aug 2020

PART ID – 570226-NZ-AUS V2.0

Nectre Big Bakers Oven

Installation Instructions

Keep these instructions for future reference

Date: 30th Aug 2020 PART ID – 570226-NZ-AUS V2.0

CONTENTS

1. INSTALLATION

THE INSTALLATION INSTRUCTIONS IN THIS MANUAL APPLY TO THE NECTRE BIG BAKERS OVEN.

1.1. IMPORTANT INFORMATION

The unit must be installed according to all manufacturers' instructions included in this manual. The manufacturer is not liable for installations that do not meet the requirements outlined in this manual.

Most building regulatory authorities in Australia require any wood heater installation to comply with Installation Standard AS/NZS 2918. Different states and councils may have varying regulations. Check local building regulations before installing the appliance.

All Nectre wood heaters have been tested to ensure they will meet the appropriate safety standard requirements if the instructions in this manual are followed. As the safety and emissions performance can be affected by altering the appliance, no modifications are allowed without written permission from the manufacturer.

WE RECOMMEND THAT THE INSTALLATION OF YOUR NECTRE WOOD HEATER BE CARRIED OUT BY A QUALIFIED INSTALLER.

WARNING: THE APPLIANCE AND FLUE SYSTEM SHALL BE INSTALLED IN ACCORDANCE WITH AS/NZS 2918 AND THE APPROPRIATE REQUIREMENTS OF THE RELEVANT BUILDING CODE OR CODES.

ANY MODIFICATION OF THE APPLIANCE THAT HAS NOT BEEN APPROVED IN WRITING BY THE TESTING AUTHORITY IS CONSIDERED TO BE IN BREACH OF THE APPROVAL GRANTED FOR COMPLIANCE WITH AS/NZS 4012 & AS/NZS 4013.

CAUTION: MIXING OF APPLIANCE OR FLUE-SYSTEM COMPONENTS FROM DIFFERENT SOURCES OR MODIFYING THE DIMENSIONAL SPECIFICATION OF COMPONENTS MAY RESULT IN HAZARDOUS CONDITIONS. WHERE SUCH ACTION IS CONSIDERED, THE MANUFACTURER SHOULD BE CONSULTED IN THE FIRST INSTANCE.

CAUTION: CRACKED AND BROKEN COMPONENTS, E.G., GLASS PANELS OR CERAMIC TILES, MAY RENDER THE INSTALLATION UNSAFE.

1.2. INSTALLING THE HEATER

1.2.1. Positioning the Heater

Review the necessary clearances specified in this section before considering where to position the heater.

Also, check the practicability of installing the flue system in relation to any obstructing roof beams before positioning the heater.

The clearance distances can only be reduced if the surrounding walls are made of non-combustible material such as stone, brick, or concrete. If non-combustible material, distance can be reduced to 100 mm. Alternatively, shielding the wall(s) can reduce clearances (refer to the next section for more detail).

Clearances to combustible surfaces vary depending on the type of flue shielding used.

1.2.2. Standard Installation

Dimensions given in the image below represent the minimum clearance (in millimeters) to combustible materials.

Side clearance = 325mm

Rear clearance = 125mm

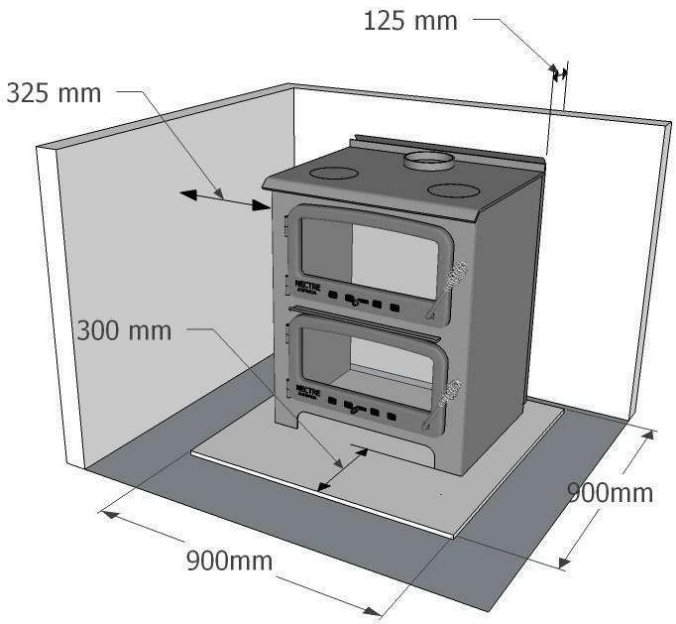

1.2.3. Corner Installation

Dimensions given in the image below represent the minimum clearance (in millimeters) to combustible materials.

Corner clearance = 275mm

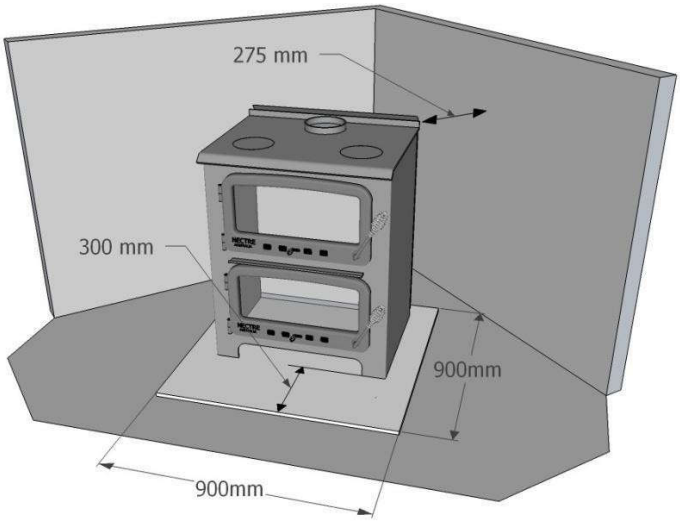

1.2.4. Floor Protector

Unless the heater is standing on a heat resistant floor such as concrete slab with slate or tiles, it will be necessary to provide a floor protector.

The minimum required dimensions for the floor protector are shown in the previous images. It must extend no less than 300mm in front of the door opening, no less than 200mm either side of the door opening, and extend under the heater. Minimum dimensions for the floor protector are 900mm wide by 900mm deep. It may be desirable, for example, aesthetic reasons, for the floor protector to be larger than these minimum dimensions.

The floor protector shall be constructed of non-combustible material no less than 15mm thick and with a thermal conductivity not greater than 0.33W/m °K, e.g., compressed cement sheet OR 7mm tile underlay and 8mm tiles.

The floor protector may be laid directly on the combustible floor.

1.3. REDUCING CLEARANCES TO COMBUSTIBLES

If it is necessary to install a heater closer to a combustible surface than the stated requirements in this installation manual, it must be done in accordance with Australian Standard AS/NZS 2918:2018 Section 3, Tables 3.1 & 3.2.

Shield Construction: The shield shall be constructed from a heat resistant material. The shield must be fixed to the surface that requires protection and NOT the heater.

The Standard allows three options to reduce stated clearances.

Single-layer of continuous material with Minimum Air Gap of 12mm—Clearance Factor = 0.40

Single-layer of continuous material with Minimum Air Gap of 25mm—Clearance Factor = 0.30

Two spaced layers of continuous material with Minimum Air Gaps of 12mm + 12mm—Clearance Factor = 0.20

The shielding must be open at the top and bottom (vented) to allow continuous airflow. It is this airflow that keeps the surface requiring protection cool. Fixings should not impede this airflow.

The shielding needs to go far enough along and up the wall so that the original side and rear required clearances are not compromised. As the flue is now closer to the wall, the shielding should also protect the wall from the flue pipe.

Example:

The sidewall clearance for a heater is 325mm.

A 12mm gapped shield on the wall with a factor of 0.40.

Calculate: 325mm x 0.40 = 130mm. This is the new sidewall minimum clearance.

The shielding needs to be large enough so that none of the original clearances of 325mm are compromised.

1.4. INSTALLING THE BYPASS DAMPER HANDLE

Before installing the flue, the by-pass damper handle must be fitted. The handle is supplied inside the firebox.

Insert the threaded end of the handle into the 10mm hole on the left side of the heater. Looking down through the flue spigot, locate the threaded end of the handle with the connector attached to the by-pass damper. Screw the handle all the way into the nut until tight. Lock into place with the M4 screw.

The position of the handle should be at approximately 11 o'clock when the damper is open, and 1 o'clock when the damper is shut.

1.5. INSTALLING THE FLUE

The Nectre Big Bakers Oven must be installed with a standard 4.2M long Masport flue system with a dropbox or flue system with a dropbox that has been tested and comply with AS/NZS 2918:2001 Appendix F. Also the main flue pipe should be fitted with a 900mm long 150^0 arc or 900mm long Masport stainless steel double flue shield.

Full instructions on the installation of the flue will be supplied with the flue kit. These MUST be adhered to, including the minimum exit height from the top of the floor protector is not less than 4.6m, and the minimum exit height above the roofline of roof ridge as detailed in the instructions.

If the draft is insufficient or periodic down drafting occurs, and the heater smokes or only burns slowly, extending the flue or fitting a specialist cowl will usually resolve the issue.

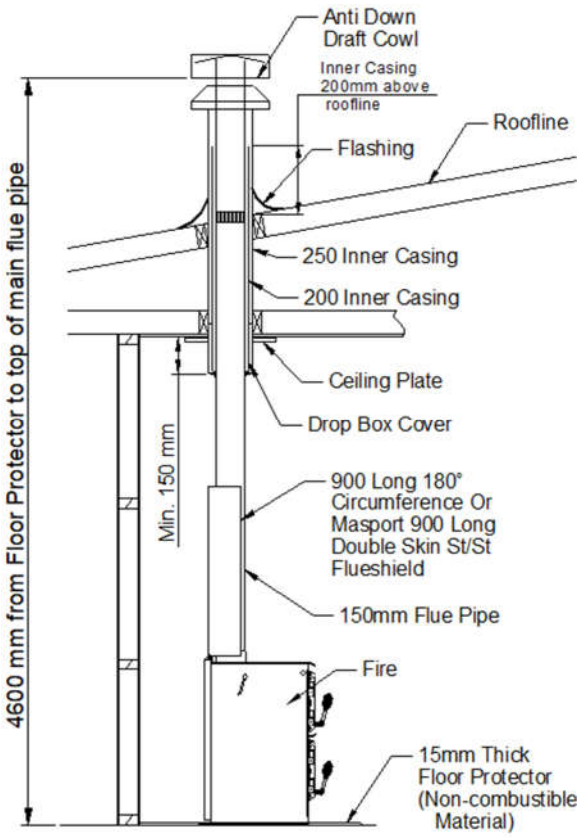

1.6. INSTALLING FIRE BRICKS

The Nectre Big Bakers Oven comes with 4 bricks (230 x 115 x 38mm) held by a 495mm long brick retainer and 2 triangular bricks (50 x 70 x 250mm) for the front.

1) Place the four fire bricks upright, up against the rear wall of the firebox.
2) Place the U-shaped brick retainer over the top of the bricks such that the bricks fit inside the U-section. This will hold them in place.
3) Place the triangular firebricks at the front of the firebox beneath the door opening.

The firebricks may already be in place upon arrival of the new appliance.

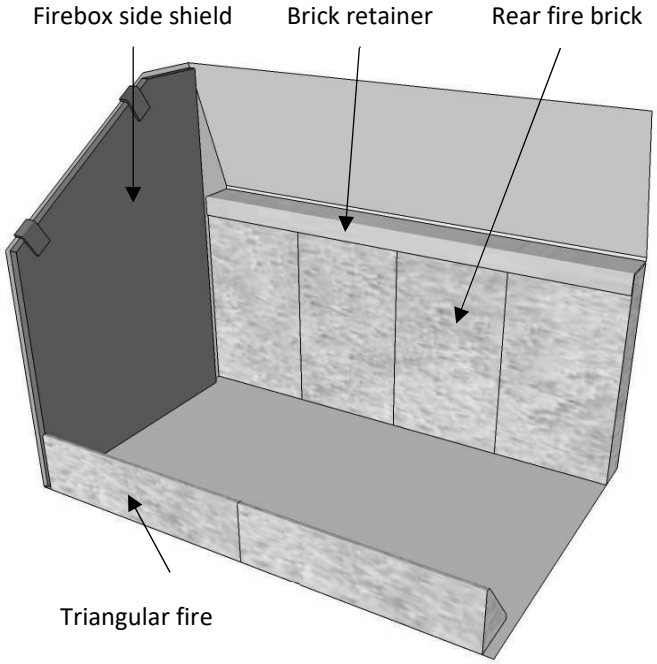

1.7. INSTALLING FIREBOX SIDE SHIELDS

The Nectre Big Bakers Oven is supplied with two 8 mm thick sacrificial shields fitted to the sides of the firebox to protect the walls of the firebox. Lugs on the shields allow them to hang over the angled cut- out on the sides of the firebox along the top.

The firebox side shields may already be in place upon arrival of the new appliance.

1.8. INSTALLING BAFFLE PLATE

The Nectre Big Bakers Oven is supplied with a 248 x 463 x 6mm baffle plate. This rests on the two lugs welded to the inside front of the firebox and on the brick retainer at the back of the heater. Ensure the baffle plate is pushed all the way to the back, so it does not fall during operation.

1.9. INSTALLING TOP AIR CONTROL HANDLE

A stainless steel rod with a thread at one end and black knob on the other will have been supplied in the heater.

1) Pass the threaded end of the rod through the hole near the top front corner on the left side of the heater.
2) Push the rod through until it has located the nut on the air slide
3) Screw rod until tight.
4) Check that the rod slides freely back and forth.

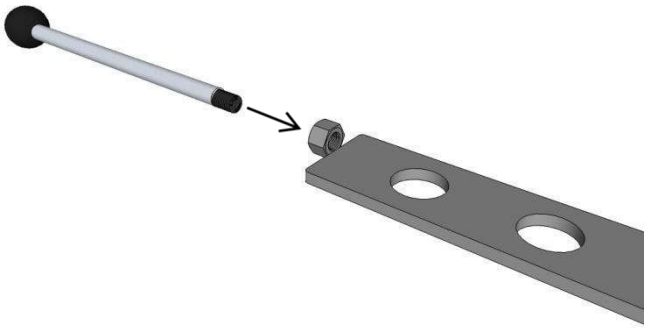

1.10 INSTALLING WETBACK MODEL

Wetback for big bakers oven are made of boiler grade stainless steel, and are factory fitted. Wetback models of the baker's oven should be installed in accordance with AS3500 4.1 or NZS 4603 and the appropriate requirements of the relevant building code or codes.

Wetback model must only be fitted to open vented hot water systems. Please note that fitting to a mains pressure system is extremely dangerous and could lead to an explosion.
Installation of wetback pipework must only be carried out by a registered plumber and the appropriate requirements of all relevant building codes and best practices. Refer the following guidelines for connecting wetback models different hot water systems.

1.11. TECHNICAL DRAWINGS

Front view

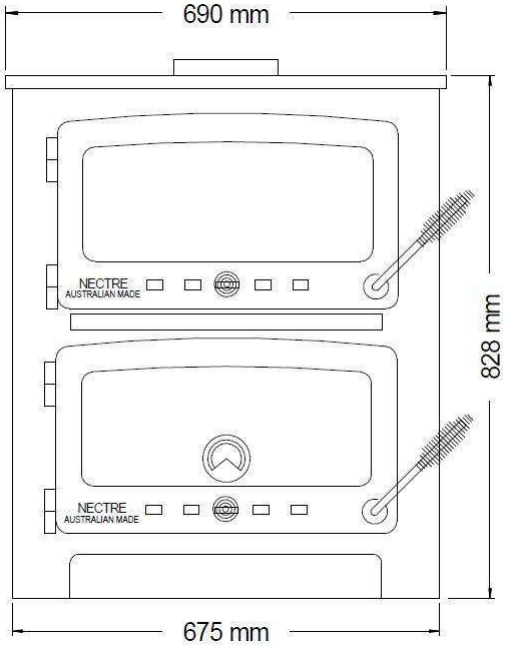

Top view

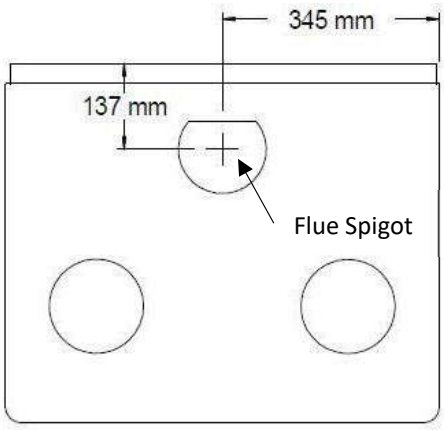

Side view

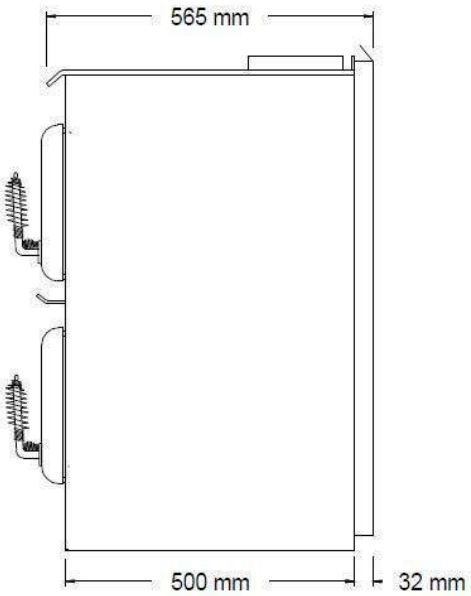

Wetback Details

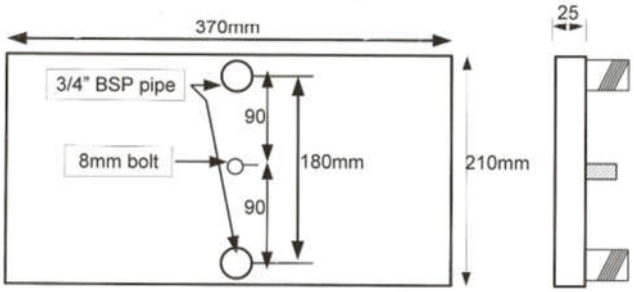

PIPE LENGTHS
B/OVEN.....200mm

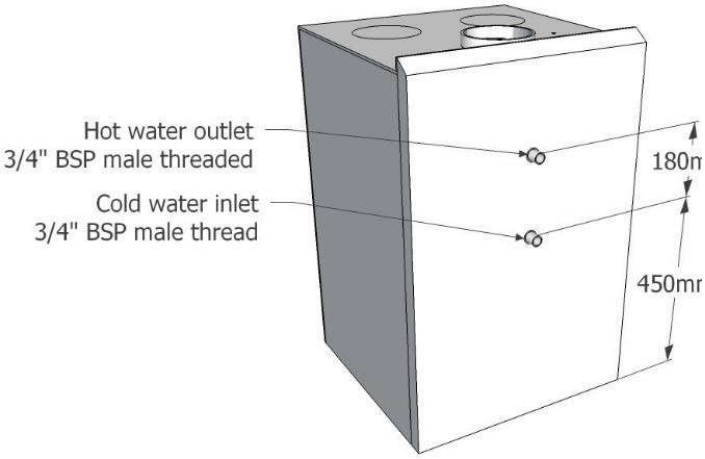

Guidelines for low-pressure hot water systems header tank (open vented)

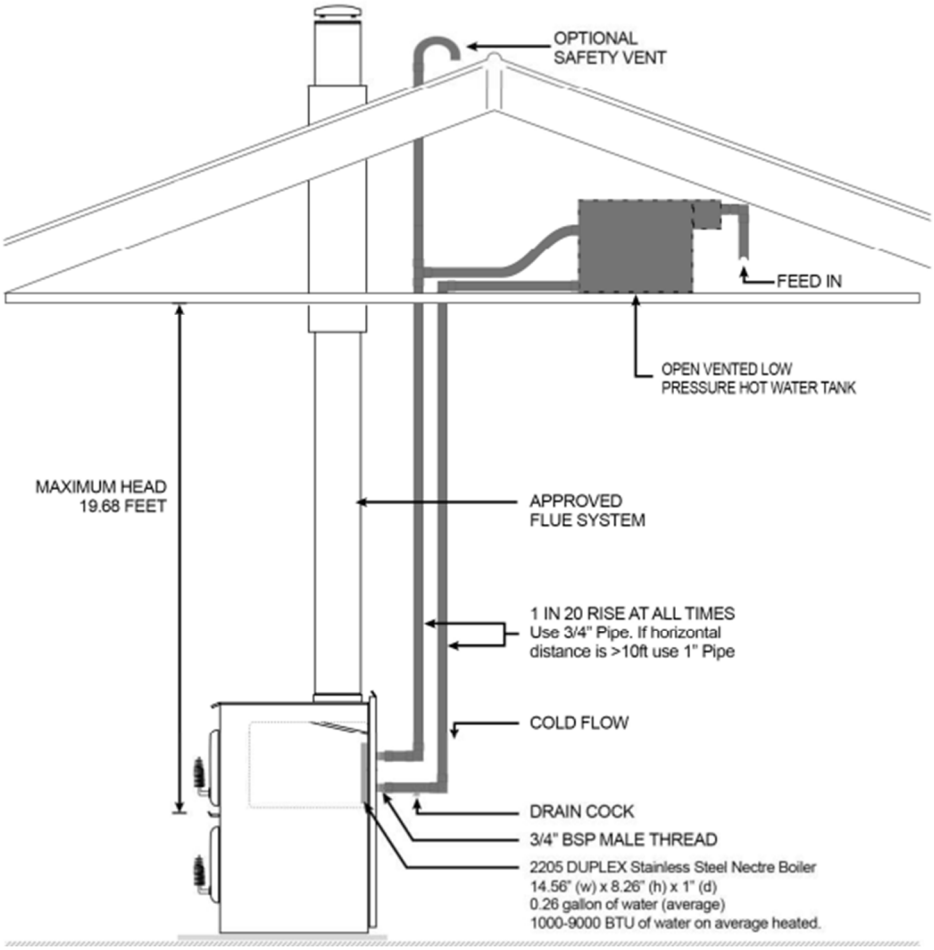

Guidelines for low-pressure hot water systems low level (open vented)

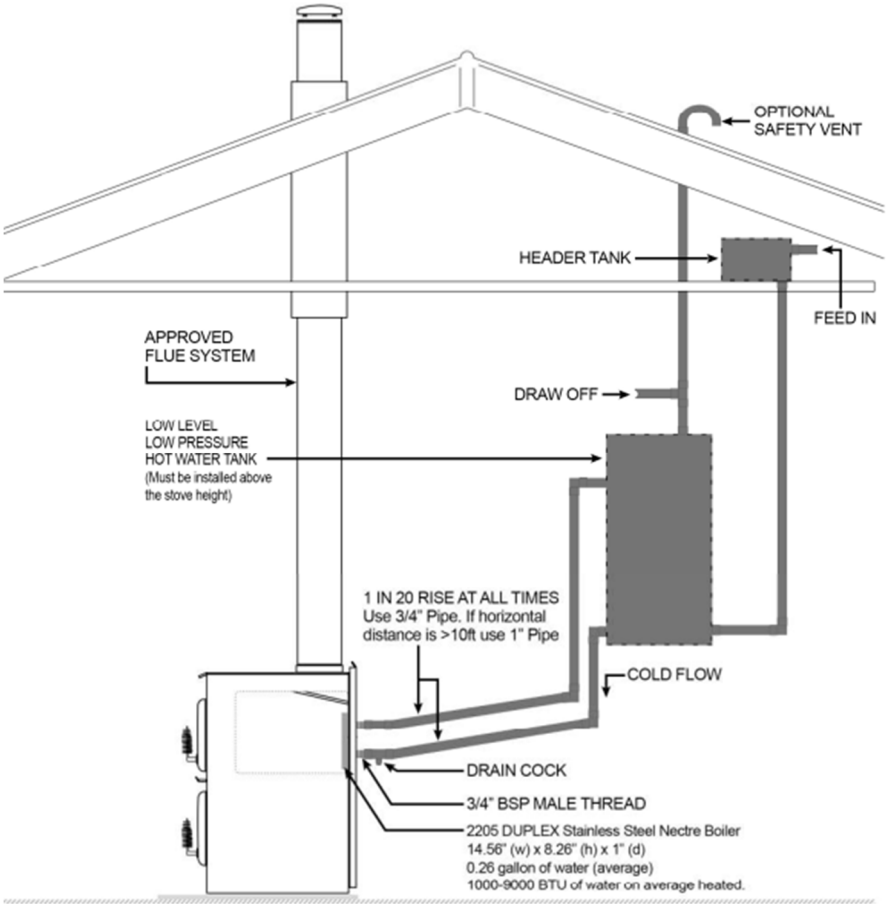

Big Bakers Oven - Technical Specifications

Nectre Big Bakers Oven model have been tested & complies to New Zealand National Environmental Safety Test Standard - AS/NZS 2918:2001	
Overall Dimensions	690mm Wide x 573 mm Deep x 828mm High
Weight	220 kg
Big Bakers Oven is a cooking appliance. Consult your local council for clarification on rules appertaining to the installation of wood-fired cooking appliances/	
Approx. Heating Capacity	Medium to Large Homes (3 bedrooms)
Flue Shield	900mm Long 150^0 arc or 900mm long Masport Stainless Steel Double Flue Shield
Flue System	Standard 4.2M Long,150mm Masport Flue System with a dropbox or flue system with a dropbox that has been tested and comply with ASNZS 2918:2001 Appendix F.
Floor Protector Requirement	Minimum 15mm thick Floor Protector made of - 15mm non-combustible fiber cement board or - Combination of 7mm tile underlay & 8mm tiles

Clearances to Combustibles

Parallel Installation

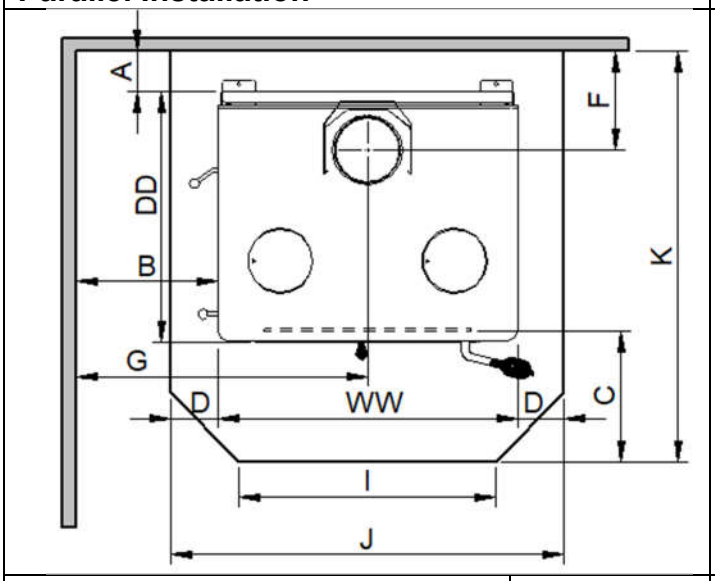

Corner Installation

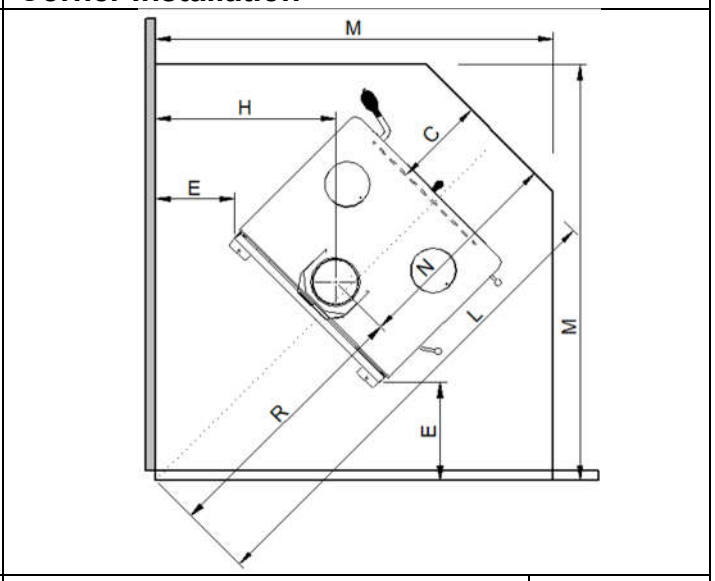

A- Rear Panel to Rear Wall	125 mm	C- Glass to Floor Protector Front	300 mm
B-Cooktop Edge to Side Wall	325 mm	E- Cooktop Corner to Wall	275 mm
C- Glass to Floor Protector Front	300 mm	H- Flue Centre to Wall	613 mm
D- Floor Protector Side	100 mm	**L- Floor Protector Diagonal**	**1582 mm**
F- Flue Centre to Rear Wall	258 mm	**M- Floor Protector Side**	**1327 mm**
G- Flue Centre to Side Wall	670 mm	N- Flue Centre to Floor Protector Front	715 mm
I- Floor Protector Front Edge	590 mm	R- Flue Centre to Wall Corner	867 mm
J- Floor Protector Width	**900 mm**	WW- Overall Width of Fire	690 mm
K- Floor Protector Depth	**973 mm**	DD- Overall Depth of Fire	573 mm
		HH- Overall Height of Fire	828 mm

Seismic Restraint - In New Zealand, it is required that the wood burner and floor protector are secured to prevent shifting in the event of an earthquake. This is best done by fastening the wood burner right through the protector to the floor, using 8mm DynaBolts or 8mm coach screws or equivalent toggle fasteners for wooden floors of appropriate lengths. Seismic holes are at the rear of the burner.

Standard 4.2m Long, 150mm Masport Flue System with Dropbox

The Masport flue system has been tested and complies to AS/NZS 2918:2001 Appendix F.

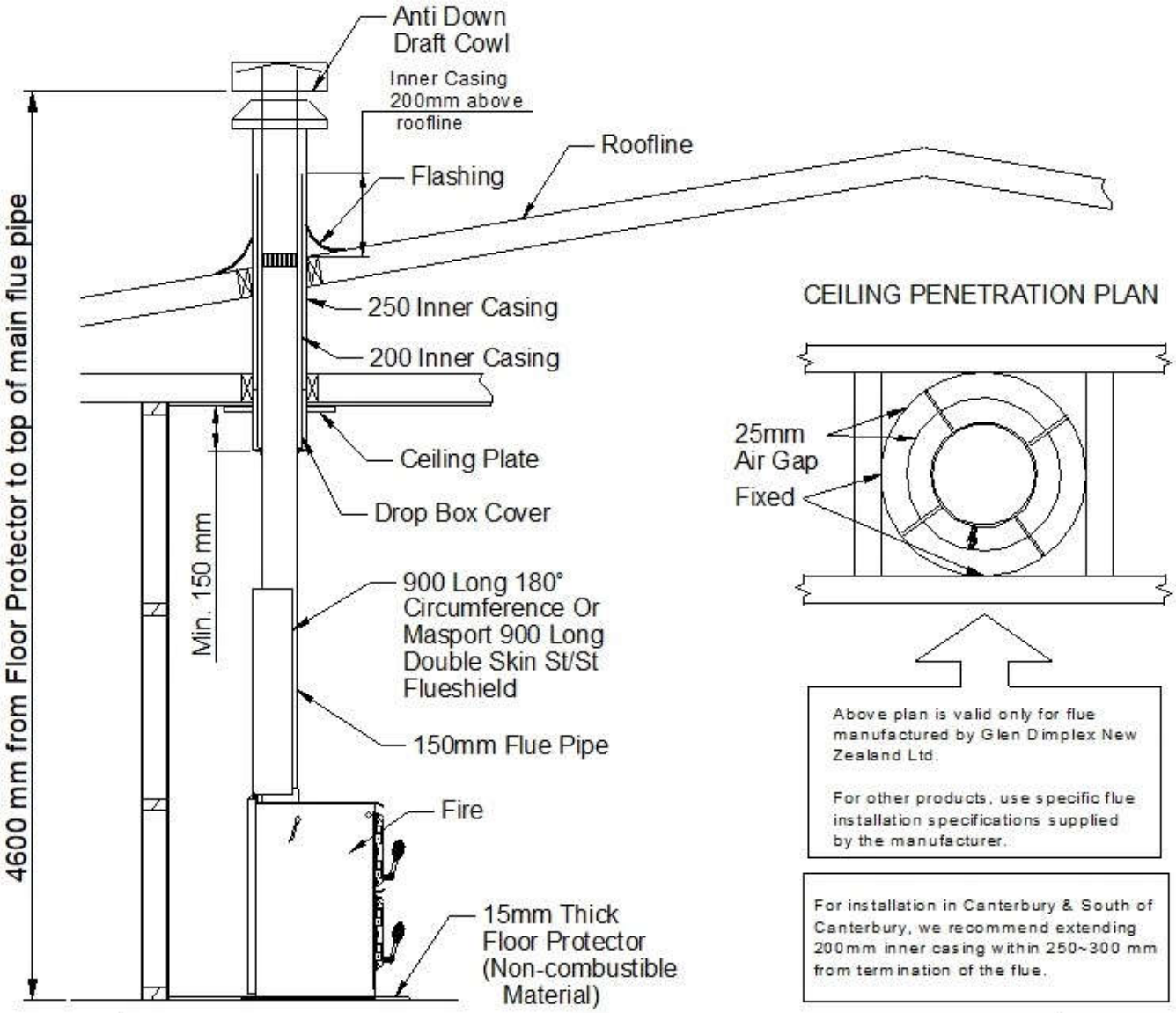

Above plan is valid only for flue manufactured by Glen Dimplex New Zealand Ltd.

For other products, use specific flue installation specifications supplied by the manufacturer.

For installation in Canterbury & South of Canterbury, we recommend extending 200mm inner casing within 250~300 mm from termination of the flue.

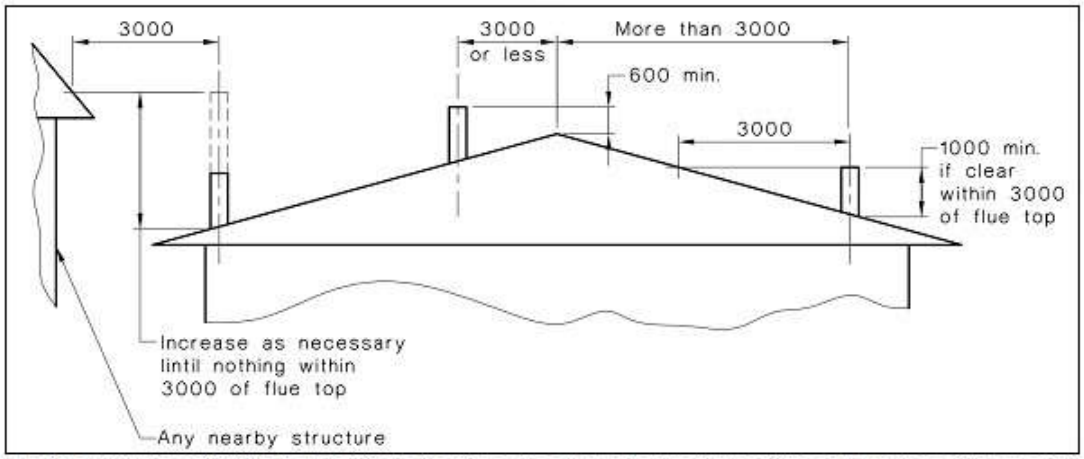

If a flue exits out of the roof within 3 meters from the ridge, the outer shield height shall be not less than 600mm above the ridge. If the flue exits further than 3 meters out from the roof ridge then it must project at least 1000mm above roof penetration. This dimension may need increased to ensure that the top of the flue is at least 3 meters away from the roof or other obstructions when measured horizontally.

The flue pipe shall extend not less than 4.6m above the top of the floor protector. Due to factors such as roof pitch, predominant winds, nearby obstructions (ie. trees, buildings), and fire placement, flue lenghts and hats/cowls may vary.

Nectre Big Bakers Oven

Operating Instructions

Keep these instructions for future reference

***Glen Dimplex New Zealand Ltd, reserves the right to change specifications, the content of this manual, or the design of its product without prior notice.**

Date: 30th Aug 2020

PART ID – 570226-NZ-AUS V2.0

CONTENTS

1. OPERATING

THE OPERATING INSTRUCTIONS IN THIS MANUAL APPLY TO THE NECTRE BIG BAKERS OVEN.

1.1. IMPORTANT INFORMATION

Before the use of this appliance, please read these instructions fully.

WARNING: ANY MODIFICATION OF THE APPLIANCE THAT HAS NOT BEEN APPROVED IN WRITING BY THE TESTING AUTHORITY IS CONSIDERED AS BREACHING AS/NZS 4013.

WARNING: DO NOT USE FLAMMABLE LIQUIDS OR AEROSOLS TO START OR REKINDLE THE FIRE.

WARNING: DO NOT USE FLAMMABLE LIQUIDS OR AEROSOLS IN THE VICINITY OF THIS APPLIANCE WHEN IT IS OPERATING.

WARNING: DO NOT STORE FUEL WITHIN HEATER INSTALLATION CLEARANCES.

WARNING: WHEN OPERATING THIS APPLIANCE AS AN OPEN FIRE USE A FIRE SCREEN.

WARNING: OPEN AIR CONTROL (AND DAMPER WHEN FITTED) BEFORE OPENING FIRING DOOR.

WARNING: DO NOT BURN WOOD THAT IS PAINTED, OR IS COATED WITH PLASTIC, OR HAS BEEN TREATED WITH ANY CHEMICAL.

CAUTION: THIS APPLIANCE SHOULD NOT BE OPERATED WITH A CRACKED GLASS.

CAUTION: THIS APPLIANCE SHOULD BE MAINTAINED AND OPERATED AT ALL TIMES IN ACCORDANCE WITH THESE INSTRUCTIONS.

The appliance or flue system should not be modified in any way without the written approval of the manufacturer.

Extractor fans or cooker hoods must not be placed in the same room or space as this can cause the appliance to emit smoke into the room.

1.2. GENERAL OPERATION

Air Controls

The Nectre Big Bakers Oven has two air controls and a bypass damper for controlling the fire.

The top air slide allows air to enter the firebox from above the door where it is then drawn down into the base of the fire while keeping the glass clean. Pull knob out to the left to open and push into the right to close.

The bottom air slide allows air to enter directly into the base of the fire and is used as a boost, especially when getting the fire up to temperature. Slide spring handle to the left to open and to the right to close.

The bypass damper is opened by pushing the handle towards the rear and closed by pulling the handle towards the front. In the open position, the flame path is diverted from the firebox directly up the flue. In the closed position, the flames are diverted down the sides of the heater, around the oven before traveling up the rear of the heater and the flue.

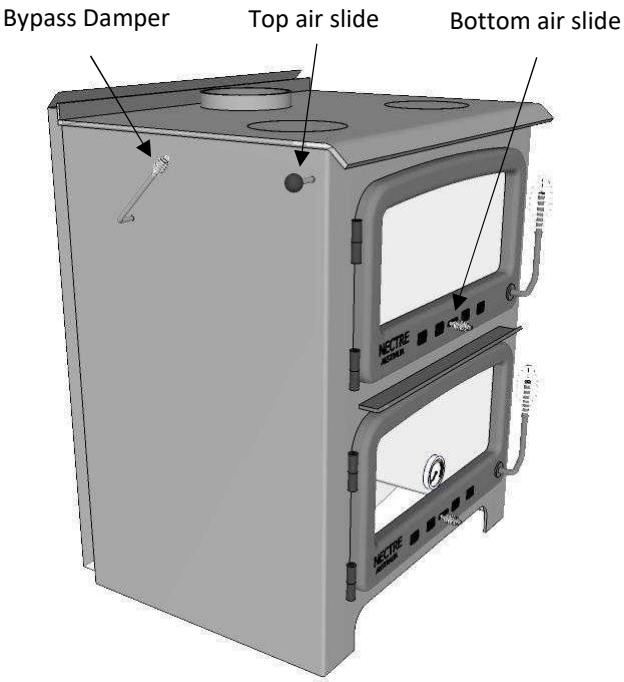

Door Handle

Warning: The door handle may get hot if the appliance has been left in the high burn setting for an extended period. Use a protective glove to open.

Open the top air slide before opening the door to eliminate the chance of backdraft and smoke entering the room.

1.3. USING THE APPLIANCE FOR THE FIRST TIME

- For the first few times, the appliance is lit, odorous fumes will be given off as the paint cures.
- Do not touch the paintwork while it is curing; otherwise, it can leave a permanent mark on the appliance.
- Keep the room well ventilated until these fumes have cleared.
- Once the paint has cured, this will not re-occur.

1.4. RECOMMENDED FUELS

- Burn only dry, well-seasoned firewood which has been cut, split and stacked for at least 12 months, with free air movement allowing it to dry out.
- In NZ, radiate pine or macrocarpa is the most commonly available softwood species that are suitable for firewood. Other hardwood species like eucalyptus (bluegum) can also be mixed with softwood to achieve longer burns.
- Wood should be stored in an environment protected from the weather to minimise any potential moisture content.
- For best results, wood should not exceed ¾ of the firebox front to back dimension in length and 150mm in diameter. Any larger and appliance will not operate at its optimum. It is better to burn several smaller pieces of wood than one large piece at a time.
- Poor quality timber:
    - Causes low combustion efficiency.
    - Produces poor emissions (smoky).
    - Results in additional build-up of creosote (soot) in the flue, which will then require regular cleaning and may result in a flue fire.
- Do not burn painted, impregnated/treated wood, manufactured board products, or pallet wood.

1.5. LIGHTING THE FIRE

1) Place firelighters or paper and dry kindling wood in the base of the firebox.
2) Fully open air controls (slide top and bottom air slides to the left, push bypass damper handle towards the rear).
3) Light the paper or firelighters.
4) Once the fire has taken hold, add larger pieces of wood. For optimal burn conditions, place the logs in a front to back orientation (right angles to the door opening). Too many logs may smother the fire.
5) Once the fire is established, close the bypass damper (pull to front) to increase heating efficiency.
6) Once the fire is established, close the bottom air slide (slide to the right). Leaving this open can risk over-firing and damaging the appliance.

Do not leave the appliance unattended while the door is open.
Do not leave fire unattended with bottom air control open as over-firing may occur.

1.6. RUNNING THE APPLIANCE

High Heat Output

This setting generates maximum heat output and high oven temperatures. It is not the most energy-efficient as some heat is lost up the flue instead of being transferred into the room. However, once the fire has been established, particulate emissions will be very low (clean burning).

- After establishing the fire and loading it with larger pieces of wood, leave it running with the top air slide fully open to generate high heat output.
- Running the appliance with the door open will not produce maximum heating in the room as it will draw a lot of already warmed air out of the room.
- Similarly running the heater with the top air slide and the bottom air slide fully open will often not give the hottest fire as too much heat is lost up the flue and does not come into the room
- ***Do not overload the firebox with fuel.***

Low Heat Output

This setting will provide the best energy efficiency as the wood burns for longer. However, if not operated correctly may result in higher particulate emissions.

- The heat output on the appliance can be reduced by closing the air controls, which will restrict the oxygen supplied to the fire and slow down the rate at which the wood burns.
- ***Prior to closing the air slide,*** ensure the fire is burning briskly. This may require opening the air slide fully for 5-10mins before shutting down.
- For the optimum between clean-burning, and getting the best in efficiency, from the fully closed position, open the top air slide 4-5mm. The bottom air slide must be shut.
- The top air slide can be adjusted to any position so desired, depending on wanted heat output versus burn time.

Reload with more wood

1) Open the top air slide before opening the door.
2) Rake / break up any existing coals.
3) Load wood with the length orientated front to back. Better results will be achieved by loading several smaller pieces of wood rather than one large piece.
4) Close the door with the top air slide fully open and leave for a minimum of 10 minutes to allow the fresh wood to catch.
5) After 10 or more minutes, the air slide can be adjusted to the desired heat output setting.

1.7. OPERATING THE OVEN

When using the oven, ensure the bypass damper is in the closed position, and the bottom air slide in the oven door is closed.

To maintain constant oven temperature, have the fire burning briskly using small pieces of wood that provide plenty of flames.

If the temperature in the oven gets too hot, reduce the amount of oxygen to the fire by partially closing the top air slide. Alternatively, open the bottom door slide control in the oven door.

If the temperature in the oven drops below that desired, open the top air slide and add some more pieces of wood if required.

The round hotplates in the top of the heater can be removed for cooking purposes allowing the direct flame to a wok or frypan. A triangular-handled tool is provided for lifting out the round hotplates.

1.8. BURNING TIPS

Fuel Quality

Use wood with a moisture content of less than 20%. Logs should not feel moist or have moss and fungal growths.

Symptoms of burning wet wood:

- Difficulty starting and keeping a fire burning well
- Smoke and only small flames
- Dirty glass and/or fire bricks
- Rapid creosote build-up in the flue/chimney
- Low heat output
- Short burn times, and blue/grey smoke from the flue/chimney outlet

If on the rare occasion the wood is not ideally seasoned, still retaining some moisture, continue using the top air slide to determine the heat output and burn rate but also leave the bottom air slide open 3-4mm. This will allow some extra oxygen into the base of the fire allowing it to burn hotter.

Run appliance at high heat output for a short period each day to avoid large build-up of tars and creosote within the appliance and flue.

Flue Draught

The flue has two main functions:

1) To safely remove smoke, gases, and fumes from the appliance.
2) To provide sufficient draught (suction) in the appliance to ensure the fire keeps burning.

Draught is caused by the rising hot air in the flue when the fire has been lit.

The position, height, and size of the flue can affect the performance of the flue draught. Refer to the installation guide for details on the flue installation.

Factors affecting the flue draught include:

- Insufficient flue height
- Trees or other buildings nearby causing turbulence
- High and gusty winds
- Outside temperature and weather conditions
- Blocked flue

For advice on the correction of the persistent flue, problems consult your supplier/installer for more detail.

1.9. ASH REMOVAL

Depending on the type of wood burnt and frequency, the ashes will need removing every 2 to 6 weeks.

Leave a 10mm layer of ash to insulate the firebox bottom.

Excess ashes should be removed when necessary, placed in a non-combustible container with a tightly fitting lid, and moved outdoors immediately to a location clear of combustible materials.

1.10. FLUE/CHIMNEY FIRE

If a flue/chimney fire occurs:

- Shut air controls fully to smother the fire.
- Do not use the appliance after a flue fire until an accredited installer has assessed the cause and any resultant damage.

1.11. CLEANING PAINT WORK AND GLASS

- The appliance, when cold, can be cleaned with a damp cloth.
- Over the years, the black paint will fade and can be touched up with Stove Bright metallic black paint.
- To clean the glass, use a dampened newspaper with ash or a non-caustic oven cleaner. Do not use a cleaner that contains caustic chemicals

Do not use an abrasive cleaner or scourer pads.

1.12. CLEANING THE FLUE

Check inside of the flue prior to each season for any build-up of creosote (wood tar).

To check the flue:

1) Remove the baffle plate (refer to 'Replacing the Baffle Plate' under Maintenance & Servicing).
2) Hold a small mirror on an angle below the flue, with a torch shining towards it, and look for black creosote build-up. It is normal to see a fine black powdery layer, but if built-up layers of creosote can be seen, the flue requires cleaning.
3) If no cleaning is required, refit the baffle plate.

To clean the flue:

1) A flue cleaning brush can be purchased from most wood heater retail outlets or large hardware stores. Alternatively, hire a flue cleaning service to do the job for you (it's a dirty job).
2) With the baffle plates removed, tie a rope to one end of the brush, and drop the rope down the flue (from outside on top of the roof).
3) Grab the end of the rope from inside the firebox and pull the brush down through the flue.
4) Check the inside of the flue with the mirror and torch.
5) Repeat the cleaning process if necessary.
6) Once the flue is clean, remove any excess creosote from the firebox.
7) Replace the baffle plate.

Only pull the brush downwards through the flue, as pulling upwards may separate the flue sections at their joins.

1.13. TROUBLESHOOTING TIPS

Glass indoor blackening

This can have several possible causes:

- Burning unseasoned wood — If the wood is too wet, it will cause the glass to blacken.
- Appliance operated at low temperature — After an overnight burn where the air control has been fully closed, the glass may have blackened. When the fire is re-stoked and burning on the high heat setting, the blackened glass should self-clean.
- Problems with the flue — Insufficient flue draught can cause the glass to blacken. If the flue is too short, not properly insulated, or in a position that results in a downdraught, then there will be insufficient flue draught. Contact the installer should this happen.

Trouble starting the fire

When cleaning, it is best to retain some ash in the base of the firebox. A layer of ash insulates the base, helping to maintain a high temperature for combustion. Also, if all the ash has been removed from the firebox, it can affect the supply of air to the base of the fire.

2. MAINTENANCE AND SERVICING

2.1. REPLACING THE FIRE BRICKS

The firebox needs fire bricks to increase the thermal mass and guarantee the longevity of the steel firebox. Over time the firebricks may become cracked and crumble away. At this point, they should be replaced.

To replace the firebricks:

1) Remove the firebox side shields.
2) Remove the brick retainer.
3) Remove bricks and ash from the firebox.
4) Replace with new bricks and reposition the brick retainer over the bricks.
5) Refit the side shields.

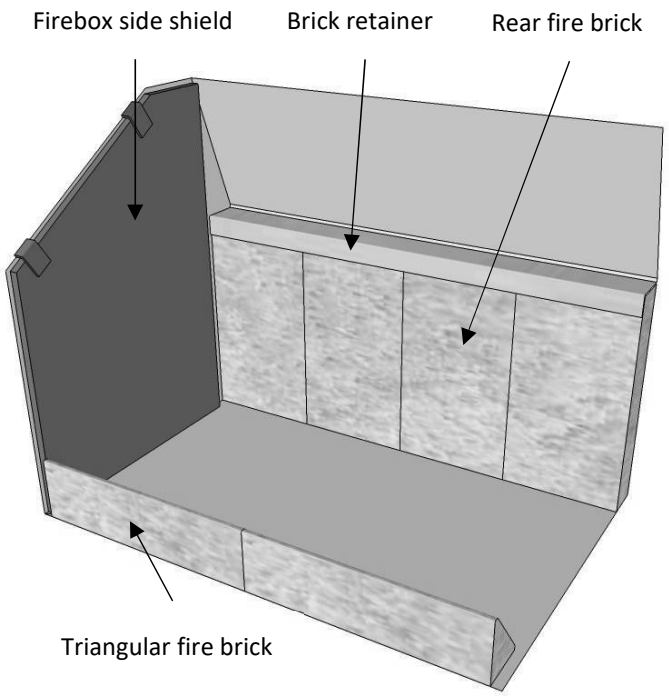

2.2. REPLACING THE FIREBOX SIDE SHIELDS

The heater comes with two 8mm thick sacrificial shields fitted to the sides of the firebox to protect the walls of the firebox.

Lugs on the shields allow them to hang over the angled cutout on the sides of the firebox along the top.

To remove the shields, raise until the support hooks are clear of the triangular cutout on the side of the heater and remove.

To fit new side shields, simply hang them on the diagonal edge of the triangular cutout on each side of the firebox.

The side shields come as a left and a right; they are not interchangeable.

2.3. REPLACING THE BAFFLE PLATE

The baffle plate helps to retain the heat in the firebox by lengthening the path of the flame before it goes up the flue.

Over time, the baffle plate will begin to sag a little due to the excessive heat. This will not affect the way the fire burns.

Eventually, the baffle plate will burn through (5+ years) and must be replaced.

To remove the baffle plate:

1) Slide the baffle plate forward until the rear edge is clear of the brick retainer.
2) Lowering the rear of the baffle will allow the front to slide past the front support pins.
3) Once the baffle has cleared the front support pins, it can be removed from the firebox.
4) Repeat steps 1) to 3) in reverse to fit the new baffle plate.

2.4. ADJUSTING THE DOOR

If the door does not close firmly, then the door catch can be adjusted.

After locating the door catch on the front lower right-hand side of the door opening on the inside of the firebox, using a large flat-end screwdriver, place it under the base of the catch and gently lever it out.

Close the door with the door handle to test tightness. If no improvement, repeat the process until the door can be closed firmly.

2.5. CHECK CREOSOTE BUILD UP

Over time creosote and ash can build up at the bottom of the heater. If not checked and cleaned annually, it can result in a blockage stopping the flames and smoke from exiting up the flue when the by-pass damper is closed.

The plate at the bottom of the oven can be lifted from the front where there is a raised edge. With a dustpan brush, go through the square access hole and brush along the sides and rear of the heater bringing any creosote build-up into the center so it can be removed with the dustpan.

2.6. REPLACING DOOR GLASS

This task may be easier with the door removed from the appliance and laid horizontally on a work-bench.

To replace the door glass:

1) Remove the four screws securing the glass retainers to the door.
2) Remove the old glass.
3) Replace fiberglass rope seal if worn.
4) Fit the new glass into position
5) Screw down the glass retainers. Take extra care not to over-tighten the screws as this could crack the glass.
6) Dispose of the old glass in a responsible manner.

Occasionally the M4 screws will have deteriorated from the constant heat in the firebox, resulting in snapping off when loosening. In this case, a new hole can be drilled in the door and tapped using a 3.4mm drill bit and M4 tap.

2.7. REPLACING THE DOOR SEAL

This task may be easier with the door removed from the appliance and laid horizontally on a work-bench.

1) Remove any remains of the old seal from the door.
2) Clean out the groove in the door that the seal was bedded in, using a flat head screwdriver or equivalent.
3) Run a thin bead of the clear roof and gutter silicone along the groove.
4) Starting at one end, press the new door seal into the groove on the door.
5) Refit the door if it has been removed.

2.8. REPLACEMENT SPARE PARTS LIST

Firebricks

4 Rectangular @ 230mm x 115mm x 38mm

2 Triangular @ 50mm x 70mm x 250mm

Brick Retainer

Stainless steel 495mm x 48mm x 25mm

Baffle Plate

Steel 248mm x 463mm x 6mm

Side Shields

Left and right pair @ 370mm x 255mm x 8mm

Door Seal

1610mm x 13mm round braided ceramic rope

Glass Seal

1360mm x 8mm x 3mm flat adhesive back

Door Glass

476mm x 200mm x 5mm pyro ceramic

Cut Here

GLEN DIMPLEX WARRANTY REGISTRATION

BIG BAKER'S OVEN

Thank you for purchasing a Nectre appliance. We ask you to complete the following information and return to the Glen Dimplex Warranty Registration Department on the following address:

New Zealand : P O Box 58473, Botany, Manukau 2163, Auckland
Australia : Unit 1, 21 Lionel Road, Mount Waverley, Victoria 3149

Mr / Mrs / Miss / Ms Name: _____

Address: _____

_____ Post Code: _____

Telephone: _____ Fax: _____

Email _____

Model: _____ Serial Number: _____

Retailer: _____ Purchase Date: _____

Price: _____

Installed By: _____ Date Installed: _____

We at Glen Dimplex strive to provide you with quality products and have a continuous product development program. To help achieve our objectives to our mutual benefit we would welcome your feedback on the following questionnaire.

Question	Please tick appropriate remark			
1.General presentation of Product	□ Excellent	□ Good	□ Ok	□ Needs to Improve
2.Styling and Looks	□ Excellent	□ Good	□ Ok	□ Needs to Improve
3.Packaging	□ Excellent	□ Good	□ Ok	□ Needs to Improve
4.Is documentation easy to follow and informative?	□ Excellent	□ Good	□ Ok	□ Needs to Improve
5.Fixtures & Fittings (Loose parts)	□ In order	□ Items missing		□ Needs to Improve
6.Do you currently own Masport, Nectre or Dimplex product?	□ Yes	□ No	Which? -	
7.Why did you decide on Nectre? (tick one or more options)	□ Knew this brand		□ Suggested by Friend	
	□ Dealer recommended		□ Better Price	
	□ Performance		□ Features	
8.Other Comments				

Privacy Act Notice: the owner named on the Warranty Registration consents and agrees that Glen Dimplex may retain and use the information in this warranty card, including details about the owner for marketing and development purposes. The owner also agrees that Glen Dimplex may also share purposes with [intended recipients of such information]. In accordance with the New Zealand Privacy Act 1993 and the Australian Privacy Act 1988, the owner shall have the right to request the correction of, as well as inspect, all personal information held by Glen Dimplex on that owner.

Please cut and mail this completed form within 30 days of installation to your Glen Dimplex Warranty Registration Department at the above address

Cut Here

Cut Here

WARRANTY FOR BIG BAKER'S OVEN

This warranty is provided in New Zealand by Glen Dimplex New Zealand Ltd and in Australia by Glen Dimplex Australia Pty Ltd. (together referred as "Glen Dimplex")
This warranty is provided to the first domestic purchaser of a Nectre N65 Low Emission Burner. It applies from the date of purchase from or through an authorized Nectre Fire Distributor in relation to each product or component for the period below.

TYPE OF PART	**WARRANTY (In Years)**	
	PARTS	LABOUR
BURNER's STEEL FIRE BOX	10	5
DOOR GLASS & SEAL	1	1
FIRE BRICKS / BOARDS & RETAINERS	1	1
BAFFLE SYSTEM & AIR TUBES	1	1
GLEN DIMPLEX FLUE SYSTEM	1	1

During the warranty period, Glen Dimplex will repair or replace (at its option) any Nectre Wood Fire which is found to be defective in materials or workmanship. Repairs will be carried out by an approved Nectre Heating Service Agent.

What is covered under this warranty?

- Repair or replacement of parts
- Labor costs relating to the Wood Burner
- Reasonable transport or travel costs.

Consumers may have additional rights under the Consumer Guarantees Act 1993 (New Zealand) or the Australian Trade Practices Act 1974 including the Australian Consumer Law.

Conditions

This warranty does not apply and will be void where:

- The Wood Burner is not installed in accordance with AS/NZS2918/:2001 or any building code or consent;
- The Wood Burner is not installed by a qualified specialist installer;
- Any electrical work has not been carried out by a Registered Electrician;
- The Wood Burner has been moved and reinstalled, or has been modified in a manner that is not consistent with the Installation Guide or the Owner's Manual;
- The Wood Burner has not been installed, operated, or maintained according to the Installation and Operations Manual;
- The Wood Burner is acquired for business use in any way.

What is not covered?

- Wear and tear, including wear and tear through normal use on Multi-fuel fire grates and cast-iron firebox liners.
- Labor costs relating exclusively to components not manufactured by Glen Dimplex.
- Damage caused by incorrect use or the burning of treated or painted wood, driftwood or other fuels which are not recommended;
- Travel costs for a distance greater than 50 km from the nearest approved Nectre Heating Service Agent. (The location of the Wood Fire must be advised to Glen Dimplex or its sales agents at the time of purchase or using warranty registration form)
- Defects, malfunctions, or failures caused by incorrect installation, poor installation, normal wear and tear, misuse, neglect, accidental damage, or failure to follow operating instructions in the Owner's Manual (including fuel selection, product operation and maintenance instructions), repairs or modifications by persons not authorised by Glen Dimplex, use of parts not supplied by Glen Dimplex, or damage or other events which have occurred since the product left the control of Glen Dimplex.
- Direct, indirect, or consequential losses or special damages of any kind (including costs of collection and delivery) other than repair or replacement of products or components under this warranty, where any goods are acquired or used for the purposes of a business;

How to obtain warranty service?

- Completed Warranty registration form (previous page) needs to be mailed within 30 days of installation to your Glen Dimplex Warranty Registration Department.
- Warranty Claims must be made at the place of purchase.
- Reasonable proof of purchase date is required to make a warranty claim. You should keep your purchase receipt.
- Warranty repair will be completed according to the normal work practices of the service agent.
- Make the faulty part(s) available to Glen Dimplex for inspection so that the validity of the claim can be established by them.

Manufactured in New Zealand by:
GLEN DIMPLEX NEW ZEALAND LTD
NZ Registration No – 1506305
P.O. Box 58473, Botany,
Manukau, Auckland 2163
Phone: 0800 666 2824
Fax : 09 274 8472
Email : sales@glendimplex.co.nz
Web : www.nectre.co.nz